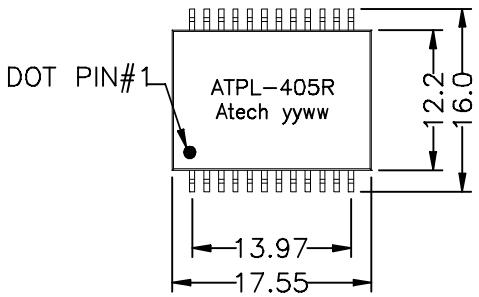

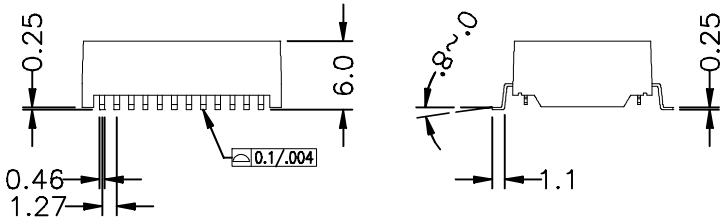

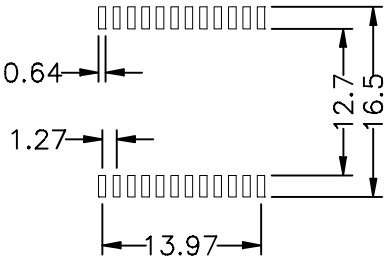

SUGGESTED PAD LAYOUT

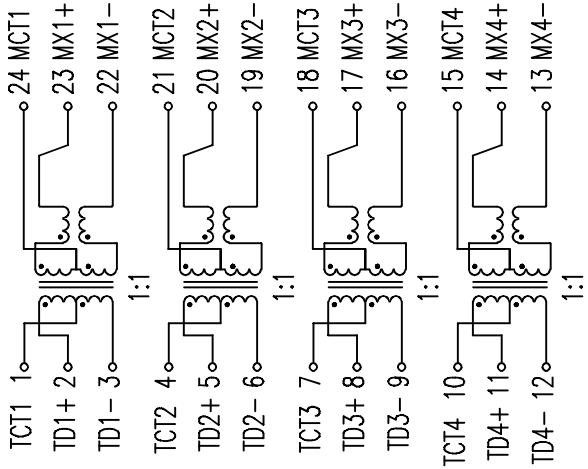

ELECTRICAL CHARACTERISTICS :

1. INSULATION HI-POT : 1500 Vrms/0.5mA 1 Sec.
2. TURN RATIO (±5%) : 1CT : 1CT ±5%
3. OCL : (@100KHz, 0.1Vrms) 350uH MIN. , 15mA DC Bias
4. INSERTION LOSS : 0.3MHz = −1.2 dB MAX.
   1−125MHz = −2 dB MAX.
5. RETURN LOSS (dB MIN. @100Ω) : 1−40MHz −16 ; 40−100MHz −10
6. DIFFERENTIAL TO COMMON MODE REJECTION (dB MIN.) : 30MHz −30 ; 200MHz −15
7. OPERATING TEMPERATURE RANGE : −40℃ ~ +85℃
8. RoHS COMPLIANT

NO:	DESCRIPTION	DATE	BY	CHK	APPD
	RELEASE				

REVISIONS

AOEM.

TITLE 100/1000 BASE-T TRANSRORMER

DWG. NO. ATPL-405R

UNITS: | SAFETY | SHEET 1 OF 1

DATE | P/N: | DRAW